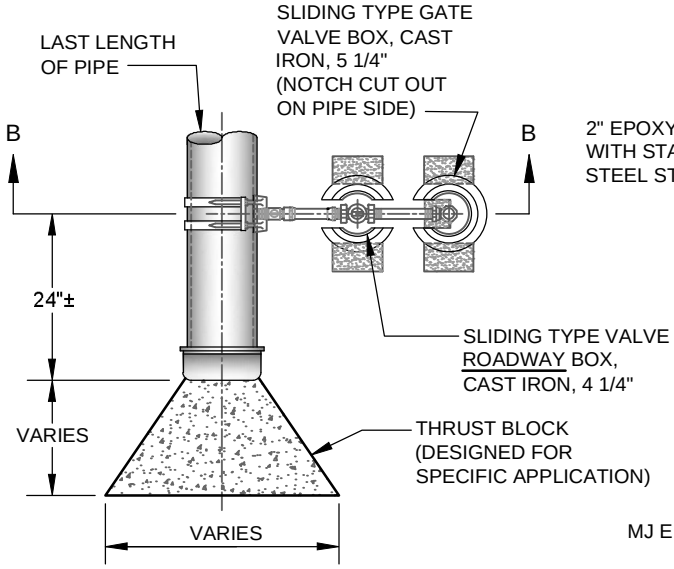

PLAN

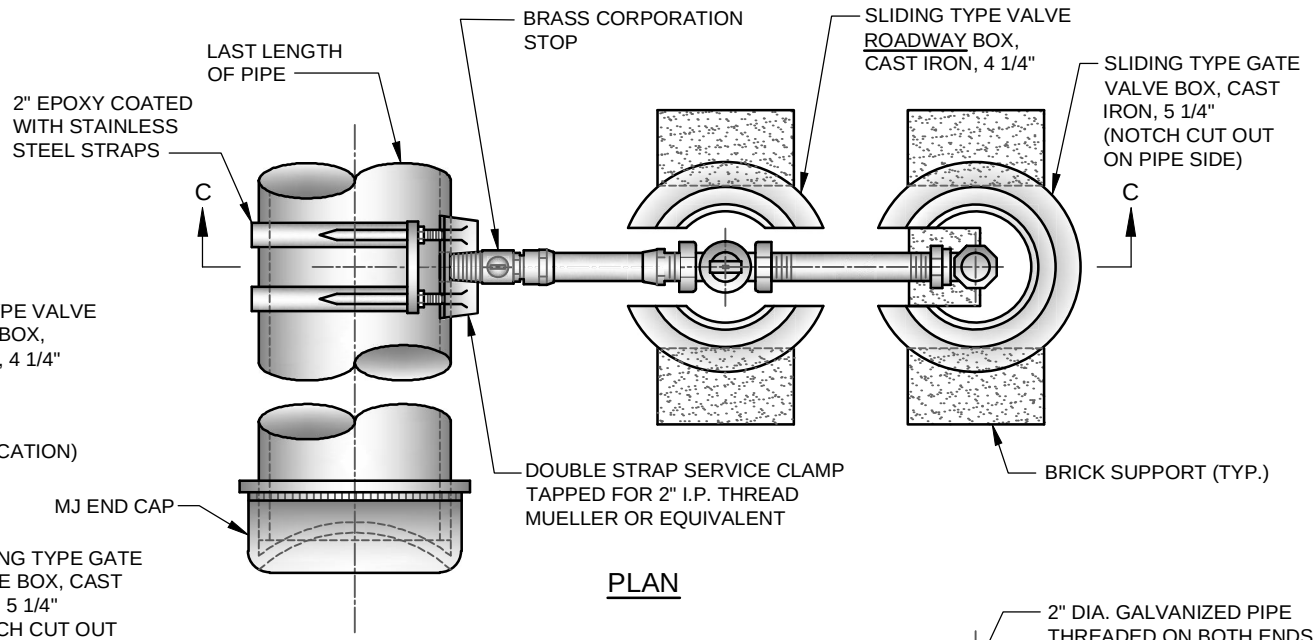

PLAN

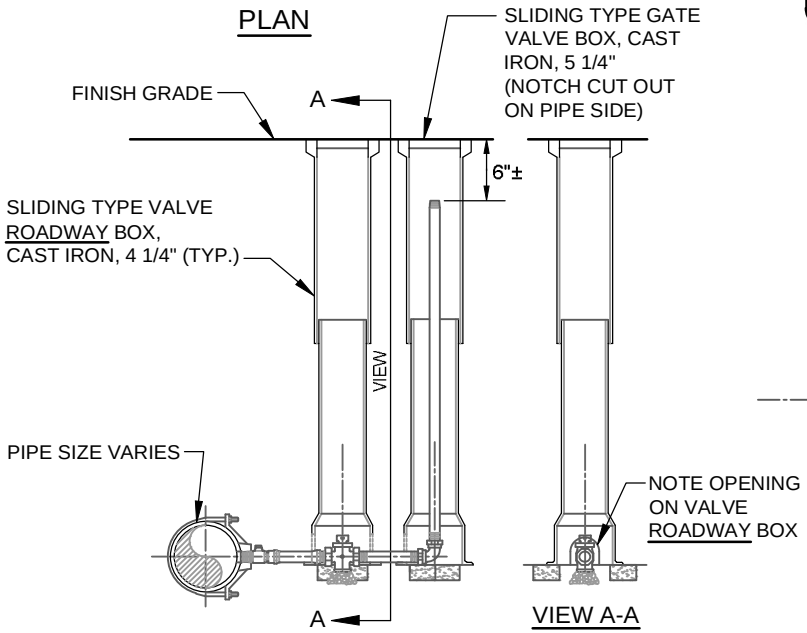

SECTION B-B

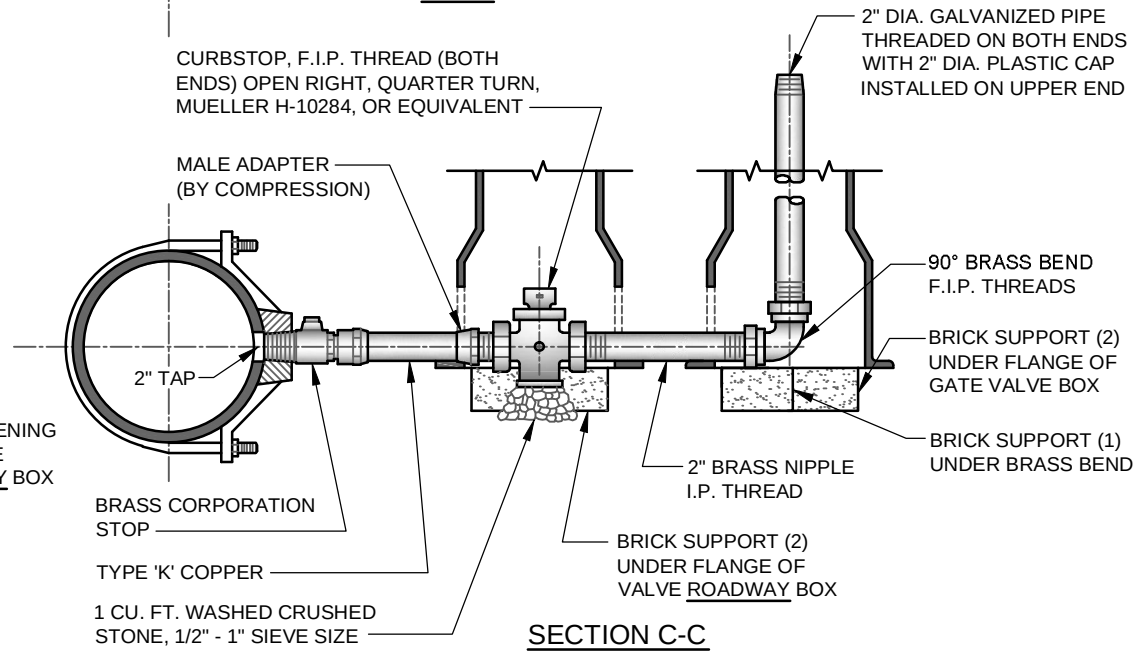

SECTION C-C

Senior Manager of Engineering — Date 2/6/13

TYPICAL NEW 2-INCH BLOWOFF ASSEMBLY
(ON EXISTING MAIN)
NOT TO SCALE

Providence Water